BALL GUIDE POST SETS

—MOVABLE STOPPER—（ALUMINUM・RESIN BALL CAGE）

Replacement parts P.943
Spring sizes P.960

①⑤ M FC250
② M SUJ2
H 58HRC～
③ M Aluminum alloy
④ M SUJ2
H 58HRC～（Induction hardening）

MYA（Aluminum type）　**MYAP**（Aluminum type with dowel hole）

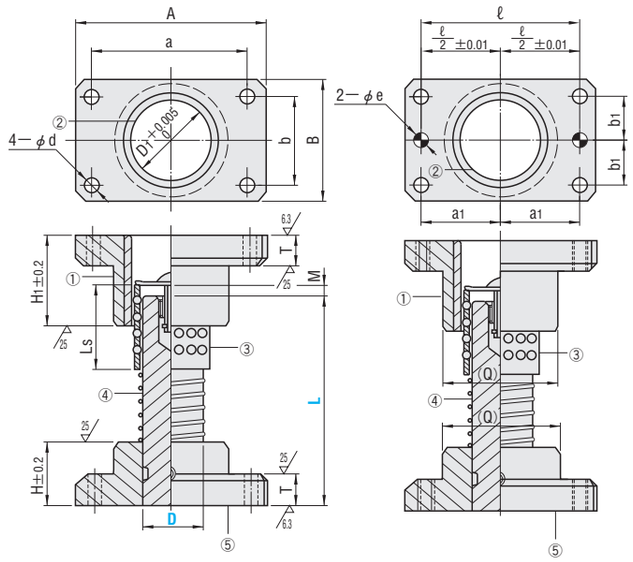

（Q） values are reference only.

Replacement parts P.943
Spring sizes P.960

①⑤ M FC250
② M SUJ2
H 58HRC～
③ M POM（Polyacetal resin）
④ M SUJ2
H 58HRC～（Induction hardening）

MYJ（Resin type）　**MYJP**（Resin type with dowel hole）

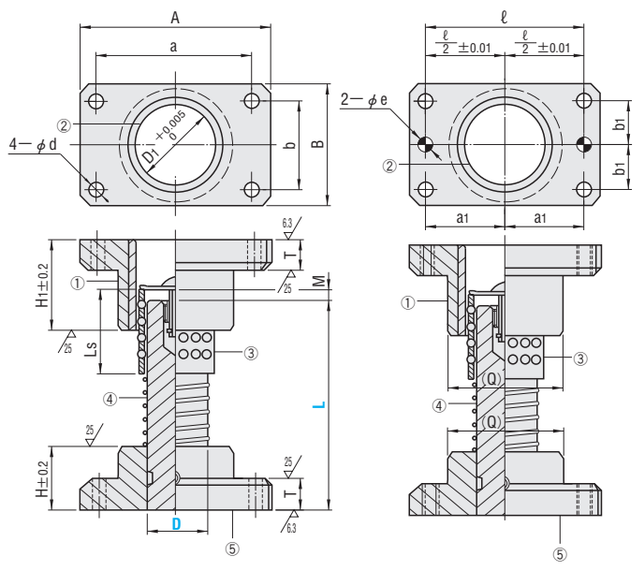

（Q） values are reference only.

Perpendicularity of guide holder bottom and guide post: 0.02mm/100mm or less（Refer to **P.944**.）

D	D_1	A	B	a	b	d	H	H_1	T	(Q)	Ls	M Stopper distance	ℓ	a_1	b_1	e_{H7}		⑥Provided bolts	⑦Provided dowel pins
20	26	74	44	56	30	6.6	30	50	15	42	50	0～20	56	28	15	6	$^{+0.012}_{0}$	CB 6—30	MSTM 6—20
25	31	84	48	66	30	9	30	50	20	46	50	0～20	66	33	15	8	$^{+0.015}_{0}$	CB 8—35	MSTM 8—30
32	40	100	58	76	36	11	40	60	20	56	60	0～25	76	38	18	8		CB10—40	MSTM 8—30
38	48	130	75	100	44	11	50	70	25	73	70	0～29	100	50	22	10		CB10—45	MSTM10—40
50	60	155	90	125	60	14	65	90	25	87	90	0～42	125	62.5	30	10		CB12—50	MSTM10—40

Catalog No. Type	D	L	Base unit price 1～9 pieces MYA	MYAP	MYJ	MYJP
MYA MYAP MYJ MYJP	20	90 100 110 120				
		130 140 150 160				
	25	90 100 110 120				
		130 140 150 160				
		170 180 200				
	32	110 120 130 140 150				
		160 170 180 200	Quotation			
		220 240 260				
	38	130 140 150 160				
		170 180 200 220				
		240 260 300				
	50	170 180 200				
		220 240 260				
		300 350				

Order　Catalog No. — L　MYJ 25 — 90

Price　Quotation

Days to Ship　Quotation

Alterations　Catalog No. — L（LC） — （M・B・H・N・C…etc.）　MYAP 50 — LC230 — B—H　Quotation

Alteration	Code	Spec.	D	1Code
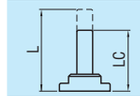	LC	Post length change 1mm increments LCmin.≦LC＜Lmax. **Details of alteration** P.944	20・25・32 38・50	Quotation
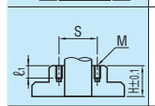	Holder M	Machining for mounting of a stroke end block Tap holes are machined for attaching a stroke end block. ⊗ Cannot be used for D20. **Details of alteration** P.944	25～50	
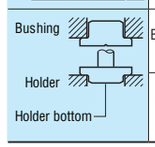	Bushing B / Holder H	Machining of flange for reversed bushing and/or holder orientation Use of the reversed bushing and/or holder allows the die height to be reduced. ⊗ Alterations B and H can be combined at the same time. ❢ The post length is measured from the holder bottom. **Details of alteration** P.944	20・25・32 38・50	

Alteration	Code	Spec.	D	1Code
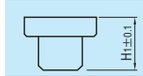	BKC	Bushing H_1 dimension tolerance change H_1±0.2 ⇨ ±0.1 ⊗ Cannot be used for D20.	25・32 38・50	
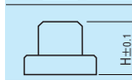	HKC	Holder H dimension tolerance change H±0.2 ⇨ ±0.1 ⊗ Cannot be used for D20.	25・32 38・50	
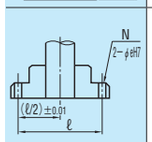	N	Addition of locating dowel holes 2 locating dowel holes are machined on the holder. ❢ Can be used for MYA and MYJ. ❢ Dowel pins are not provided. (D / ℓ / e: 20 / 56 / 6; 25 / 66 / 8; 32 / 76 / 8; 38 / 100 / 10; 50 / 125 / 10)	20・25・32 38・50	Quotation
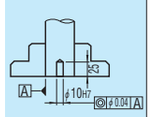	C	Addition of locating dowel hole（1 hole at center） Locating dowel hole is machined at center of post. ❢ Dowel pin is not provided.	20・25・32 38・50	
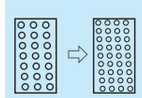	BSC	Ball retainer change Provided ball cage is changed to the high-rigidity type. Aluminum: MBSH Resin : MBJH	1Code (D / Retainer length / MBSH / MBJH: 20 / 50; 25 / 50; 32 / 60; 38 / 70; 50 / 90) Quotation	