Metal Washer

Standard / Precision Grade, Dimension Configurable

RoHS10

Part Number: Standard Grade	Part Number: Precision Grade	M Material	S Surface Treatment
FWS	FWAS	Steel for General Structure	-
FWSSC	FWASC	S45C Equivalent	-
FWSSB	FWASB		Black Oxide
FWSSM	FWASM		Electroless Nickel Plating
FWSSR	FWASR		Low Temp. Black Chrome Plating
FWSSA	FWASA	2000series Aluminum Alloy	Clear Anodize
FWSSAB	-		Black Anodize
FWSBB	-	Brass (JIS C3604)	-
FWSSS	FWASS	SUS304	-
FWSSSR	FWASSR		Low Temp. Black Chrome Plating
FWSUS	FWASU	SUS316	-

Hardened Type P.120

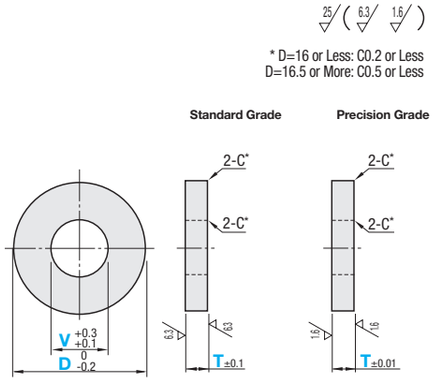

Standard Grade

Part Number	D	V 0.5mm Increment (V3 or More)	T 0.1mm Increment	FWS	FWSSC	FWSSB	FWSSM	FWSSR	FWSSA	FWSSAB	FWSBB	FWSSS	FWSSSR	FWSUS
FWS FWSSC FWSSB FWSSM FWSSR FWSSA FWSSAB FWSBB FWSSS FWSSSR FWSUS	4.0~10.0 0.5mm Increment	0 (No Hole Machining) (Selection) 2.0 2.6 (0.5mm Increment) 3.0 ~ 90.0	1.0~ 2.0											
			2.1~ 5.0											
			5.1~ 10.0											
	10.5~20.0 0.5mm Increment		1.0~ 2.0											
			2.1~ 5.0											
			5.1~ 10.0											
	21~30 1mm Increment		1.0~ 2.0											
			2.1~ 5.0											
			5.1~ 10.0											
	31~40 1mm Increment		1.0~ 2.0											-
			2.1~ 5.0											-
			5.1~ 10.0											-
	41~50 1mm Increment		1.0~ 2.0											-
			2.1~ 5.0											-
			5.1~ 10.0											-
	51~60 1mm Increment		1.0~ 2.0											-
			2.1~ 5.0											-
			5.1~ 10.0											-
	61~80 1mm Increment		5.0~ 10.0											-
	81~100 1mm Increment		5.0~ 10.0											-

Material: A2017, SUS316, Brass··· T≥2
No specification available for sizes without declaration of value.

D / V Machining Conditions
D≤60··· V≤D-2
D≥61··· V≤D-4

D / V Machining Conditions of Material A2017
4≤D≤ 10 ··· V≤D- 2
10.5≤D≤ 30 ··· V≤D- 4
31≤D≤ 60 ··· V≤D- 6
61≤D≤ 80 ··· V≤D- 8
81≤D≤100 ··· V≤D-10

Ordering Example: Part Number - D - V - T
FWSSC - D71 - V50.0 - T10.0

Precision Grade

Part Number	D	V 0.5mm Increment (V3 or More)	T 0.1mm Increment	FWAS	FWASC	FWASB	FWASM	FWASR	FWASA	FWASS	FWASSR	FWASU
FWAS FWASC FWASB FWASM FWASR FWASA FWASS FWASSR FWASU	4.0~10.0 0.5mm Increment	0 (No Hole Machining) (Selection) 2.0 2.6 (0.5mm Increment) 3.0 ~ 90.0	1.0~ 2.0									
			2.1~ 5.0									
			5.1~ 10.0									
	10.5~20.0 0.5mm Increment		1.0~ 2.0									
			2.1~ 5.0									
			5.1~ 10.0									
	21~30 1mm Increment		1.0~ 2.0									
			2.1~ 5.0									
			5.1~ 10.0									
	31~40 1mm Increment		1.0~ 2.0									-
			2.1~ 5.0									-
			5.1~ 10.0									-
	41~50 1mm Increment		1.0~ 2.0									-
			2.1~ 5.0									-
			5.1~ 10.0									-
	51~60 1mm Increment		1.0~ 2.0									-
			2.1~ 5.0									-
			5.1~ 10.0									-
	61~80 1mm Increment		5.0~ 10.0						-	-	-	-
	81~100 1mm Increment		5.0~ 10.0						-	-	-	-

Material: A2017, SUS316··· T≥2
No specification available for sizes without declaration of value.

D / V Machining Conditions
D≤60··· V≤D-2
D≥61··· V≤D-4

D / V Machining Conditions of Material A2017
4≤D≤ 10 ··· V≤D- 2
10.5≤D≤ 30 ··· V≤D- 4
31≤D≤ 60 ··· V≤D- 6
61≤D≤ 80 ··· V≤D- 8
81≤D≤100 ··· V≤D-10

Ordering Example: Part Number - D - V - T
FWASB - D15.5 - V5.5 - T2.6

Alterations: Ordering Example Part Number - D - V - T - (KC, SC, WSC, VKC, DKC, HKC)
FWASS - D20 - V10 - T5 - VKC

When both I.D. / O.D. tolerance changes are specified, the concentricity is Ø0.02.

Alterations	Code	Spec.
Keyway Relief 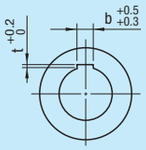	KC	Adds an keyway relief. Ordering Code KC. Machining Conditions: V≥8; Not available for D61 ~ 100.
One Flat	SC	Adds a flat. Ordering Code SC10. SC=1mm Increment. SC≥V/2+2. Not available for D4 ~ 8.
Two Flats 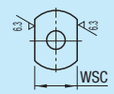	WSC	Adds two flats. Ordering Code WSC10. WSC=1mm Increment. WSC≥V+4. Not available for D4 ~ 8.

Keyway Relief dimensions:

V	b	t	D-V
8 ~10.5	3	2.0	7 or More
11~12.5	4	2.5	8 or More
13~17.5	5	3.0	10 or More
18~22.5	6	3.5	12 or More
23~30.5	8	4.0	14 or More
31~38.5	10	4.0	14 or More
39~42.5	12	4.0	14 or More
43~44.0	14	4.5	16 or More

Alterations	Code	Spec.
I.D. Tolerance	VKC	Changes the I.D. Tolerance to H7. Ordering Code VKC. Machining Conditions: D≥6 V≥3; Not applicable for FWSSAB.
O.D. Tolerance	DKC (g6) HKC (h7)	Changes the O.D. Tolerance to g6 or h7. Ordering Code DKC, HKC. Machining Conditions: When D≥43, T≥1.5; D≥6; Not applicable for FWSSAB.

VKC dimensions:

D	D-V
6~10	D-V≥2
10.5~20	D-V≥3
21~30	D-V≥6
31~40	D-V≥8
41~50	D-V≥10
51~60	D-V≥12
61~70	D-V≥14
71~80	D-V≥16
81~90	D-V≥18
91~100	D-V≥20

DKC/HKC dimensions:

D	D-V
6~10	D-V≥2
10.5~20	D-V≥3
21~30	D-V≥6
31~40	D-V≥8
41~50	D-V≥10
51~60	D-V≥12
61~70	D-V≥14
71~80	D-V≥16
81~90	D-V≥18
91~100	D-V≥20