2000series Aluminum

# Bearings with Housings

## Double Bearings with Pilot, Non-Retained, L Selectable

RoHS10

| Type | | | Material | | Surface Treatment |
|---|---|---|---|---|---|
| Round | Square | Compact | Bearing | Housing | Housing |
| BGRYB | BGSYB | BGCYB | Steel | S45C Equivalent | Black Oxide |
| BGRY | BGSY | BGCY | | | Electroless Nickel Plating |
| BARY | BASY | BACY | | 2000series Aluminum Alloy | Clear Anodize |
| SBARY | SBASY | SBACY | * Stainless Steel | | |
| SBGRY | SBGSY | SBGCY | | SUS304 | - |

* Bearings with Rubber Seals (VV and DD) are all made of steel.

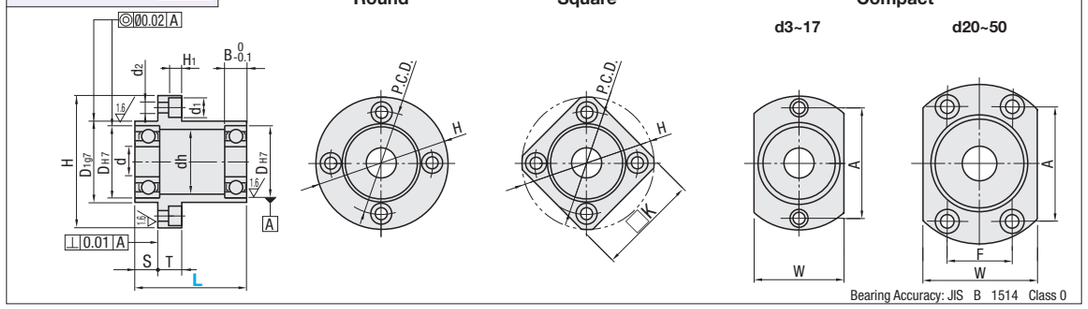


Bearing Accuracy: JIS B 1514 Class 0

| Part Number Type | Bearing No. | Seal | L Selection | S | d | $D_{H7}$ | Tolerance | B | H | W | T | dh | $D_{1g7}$ | Tolerance | P.C.D. | K | A | F | $d_1$ | $d_2$ | $H_1$ |
|---|---|---|---|---|---|---|---|---|---|---|---|---|---|---|---|---|---|---|---|---|---|
| (Round) BGRYB BGRY BARY SBARY SBGRY | 623 | ZZ Double Shielded; *1 VV Non-Contact Sealed Rubber Seal; *2 DD Contact Sealed Rubber Seal | 20 30 | 5 | 3 | 10 | +0.015 0 | 4 | 33 | 16 | 7 | 7 | 14 | -0.006 -0.024 | 24 | 27 | 24 | | 6.5 | 3.5 | 3.1 |
| | 624 | | 20 30 | 5 | 4 | 13 | +0.018 0 | 5 | 35 | 18 | | 9 | 17 | | 26 | 28 | 26 | | | | |
| | 605 | | 25 35 | 5 | 5 | 14 | | 5 | 38 | 20 | | 10 | 18 | -0.007 -0.028 | 28 | 30 | 28 | | 8 | 4.5 | 4.1 |
| | 625 | | 35 40 | 10 | | 16 | | 5 | 40 | 22 | | 12 | 20 | | 30 | 31 | 30 | | | | |
| | 606 | | 25 40 | 5 | 6 | 17 | | 6 | 41 | 23 | | 13 | 21 | | 31 | 32 | 31 | | | | |
| | 626 | | 35 45 | 10 | | 19 | +0.021 0 | 6 | 44 | 25 | | 15 | 24 | | 34 | 34 | 34 | | | | |
| | 678 | | 20 30 | 5 | 8 | 12 | +0.018 0 | 3.5 | 35 | 18 | 8 | 10 | 16 | -0.006 -0.024 | 26 | 28 | 26 | | 6.5 | 3.5 | 3.1 |
| | 698 | | 25 35 | 5 | | 19 | +0.021 0 | 6 | 44 | 25 | | 15 | 24 | -0.007 -0.028 | 34 | 34 | 34 | - | 8 | 4.5 | 4.1 |
| | 608 | | 25 35 | 5 | | 22 | | 7 | 47 | 29 | | 18 | 27 | | 37 | 36 | 37 | | | | |
| | 628 | | 35 45 | 10 | | 24 | | 8 | 50 | 32 | | 20 | 30 | | 40 | 37 | 40 | | | | |
| | 6700 | | 20 30 | 5 | 10 | 15 | +0.018 0 | 4 | 40 | 22 | | 12 | 19 | | 30 | 31 | 30 | | | | |
| | 6800 | | 20 30 | 5 | | 19 | +0.021 0 | 5 | 44 | 25 | | 15 | 24 | | 34 | 34 | 34 | | | | |
| | 6900 | | 25 40 | 5 | | 22 | | 6 | 47 | 29 | | 19 | 27 | | 37 | 36 | 37 | | | | |
| | 6000 | | 35 50 | 10 | | 26 | | 8 | 52 | 34 | | 22 | 32 | -0.009 -0.034 | 42 | 39 | 42 | | | | |
| | 6200 | | 45 55 | 15 | | 30 | | 9 | 56 | 38 | | 24 | 36 | | 46 | 42 | 46 | | | | |
| | 6701 | | 20 30 | 5 | 12 | 18 | +0.018 0 | 4 | 44 | 25 | | 15 | 23 | -0.007 -0.028 | 34 | 34 | 34 | | | | |
| | 6801 | | 25 35 | 5 | | 21 | +0.021 0 | 5 | 47 | 29 | | 17 | 26 | | 37 | 36 | 37 | | | | |
| | 6901 | | 35 50 | 10 | | 24 | | 6 | 50 | 31 | | 21 | 30 | | 40 | 38 | 40 | | | | |
| | 6001 | | 35 50 | 10 | | 28 | | 8 | 54 | 36 | | 24 | 34 | -0.009 -0.034 | 44 | 40 | 44 | | | | |
| | 6201 | | 45 55 | 15 | | 32 | +0.025 0 | 10 | 58 | 40 | | 26 | 38 | | 48 | 43 | 48 | | | | |
| (Square) BGSYB BGSY BASY SBASY SBGSY | 6702 | | 25 35 | 10 | 15 | 21 | +0.021 0 | 4 | 47 | 29 | | 18 | 26 | -0.007 -0.028 | 37 | 36 | 37 | | | | |
| | 6802 | | 25 35 | 10 | | 24 | | 5 | 50 | 32 | | 20 | 30 | | 40 | 37 | 40 | | | | |
| | 6902 | | 35 60 | 10 | | 28 | | 7 | 59 | 37 | 10 | 25 | 35 | -0.009 -0.034 | 47 | 45 | 47 | | 9.5 | 5.5 | 5.1 |
| | 6002 | | 45 65 | 15 | | 32 | +0.025 0 | 9 | 62 | 40 | | 28 | 38 | | 50 | 46 | 50 | | | | |
| | 6202 | | 50 65 | 15 | | 35 | | 11 | 66 | 44 | | 29 | 42 | | 54 | 49 | 54 | | | | |
| | 6803 | | 30 40 | 10 | 17 | 26 | +0.021 0 | 5 | 52 | 34 | | 22 | 32 | | 42 | 39 | 42 | | 8 | 4.5 | 4.1 |
| | 6903 | | 45 55 | 15 | | 30 | | 7 | 60 | 38 | | 27 | 36 | | 48 | 46 | 48 | | 9.5 | 5.5 | 5.1 |
| | 6003 | | 50 65 | 15 | | 35 | +0.025 0 | 10 | 66 | 44 | | 31 | 42 | | 54 | 50 | 54 | | | | |
| | 6203 | | 60 70 | 20 | | 40 | | 12 | 72 | 50 | | 34 | 48 | | 60 | 54 | 60 | | | | |
| (Compact) BGCYB BGCY BACY SBACY SBGCY | 6704 | | 30 40 | 10 | 20 | 27 | +0.021 0 | 4 | 59 | 35 | | 23 | 33 | | 47 | 45 | 41 | 23 | 8 | 4.5 | 4.1 |
| | 6804 | | 35 50 | 10 | | 32 | +0.025 0 | 7 | 62 | 40 | | 28 | 38 | | 50 | 46 | 44 | 24 | 9.5 | 5.5 | 5.1 |
| | 6904 | | 50 65 | 15 | | 37 | | 9 | 72 | 47 | 11 | 34 | 45 | | 59 | 54 | 54 | 24 | 11 | 6.6 | 6.1 |
| | 6004 | | 60 70 | 20 | | 42 | | 12 | 77 | 54 | | 36 | 50 | | 64 | 59 | 56 | 32 | | | |
| | 6204 | | 65 70 | 20 | | 47 | | 14 | 81 | 58 | | 40 | 54 | -0.010 -0.040 | 68 | 62 | 59 | 34 | | | |
| | 6805 | | 35 50 | 15 | 25 | 37 | | 7 | 72 | 47 | | 34 | 45 | -0.009 -0.034 | 59 | 54 | 54 | 24 | | | |
| | 6905 | | 35 50 | 15 | | 42 | | 9 | 77 | 54 | | 36 | 50 | | 64 | 59 | 55 | 32 | | | |
| | 6005 | | 60 80 | 20 | | 47 | | 12 | 88 | 58 | 13 | 41 | 54 | -0.010 -0.040 | 72 | 67 | 63 | 36 | 14 | 9 | 8.1 |
| | 6205 | | 65 80 | 20 | | 52 | +0.030 0 | 15 | 94 | 64 | | 45 | 60 | | 78 | 72 | 68 | 39 | | | |
| | 6806 | | 35 50 | 15 | 30 | 42 | +0.025 0 | 7 | 77 | 54 | 11 | 36 | 50 | -0.009 -0.034 | 64 | 59 | 56 | 32 | 11 | 6.6 | 6.1 |
| | 6906 | | 35 50 | 15 | | 47 | | 9 | 88 | 58 | 13 | 41 | 54 | -0.010 -0.040 | 72 | 67 | 62 | 36 | 14 | 9 | 8.1 |
| | 6006 | | 60 80 | 20 | | 55 | +0.030 0 | 13 | 96 | 66 | | 48 | 62 | | 80 | 73 | 70 | 40 | | | |
| | 6206 | | 70 80 | 20 | | 62 | | 16 | 104 | 74 | | 55 | 70 | | 88 | 79 | 77 | 44 | | | |
| | 6007 | | 70 80 | 20 | 35 | 62 | | 14 | 104 | 74 | | 55 | 70 | | 88 | 79 | 75 | 44 | | | |
| | 6207 | | 70 90 | 20 | | 72 | | 17 | 126 | 88 | 20 | 64 | 84 | -0.012 -0.047 | 105 | 95 | 92 | 51 | 17.5 | 11 | 11 |
| | 6008 | | 80 90 | 25 | 40 | 68 | | 15 | 114 | 82 | 13 | 60 | 78 | -0.010 -0.040 | 96 | 86 | 80 | 54 | 14 | 9 | 8.1 |
| | 6208 | | 70 90 | 20 | | 80 | | 18 | 134 | 96 | 20 | 74 | 92 | -0.012 -0.047 | 113 | 102 | 98 | 56 | 17.5 | 11 | 11 |
| | 6010 | ZZ Double Shielded | 80 | 20 | 50 | 80 | | 16 | 134 | 96 | | 74 | 92 | | 113 | - | 98 | 56 | | | |
| | 6210 | | 100 | 20 | | 90 | +0.035 0 | 20 | 147 | 110 | | 83 | 106 | | 126 | - | 104 | 72 | | | |

Check for available sizes in the price list.

*1 No. 623, 624, 605, 606 and numbers starting with 67 are not available for VV (Non-contact Sealed).

*2 Bearings with Rubber Seals are all made of steel.

Ordering Example

| Part Number | | | | L |
|---|---|---|---|---|
| Type | Bearing | Seal | - | |
| BACY | 628 | ZZ | - | 35 |
| BASY | 6900 | DD | - | 25 |

| Bearing No. | Seal | Unit Price | | | | | | | | | | | | | | |
|---|---|---|---|---|---|---|---|---|---|---|---|---|---|---|---|---|
| | | Round | | | | | Square | | | | | Compact | | | | |
| | | BGRYB | BGRY | BARY | SBARY | SBGRY | BGSYB | BGSY | BASY | SBASY | SBGSY | BGCYB | BGCY | BACY | SBACY | SBGCY |
| 623 | ZZ (x1.0) VV (x1.1) DD (x1.1) | | | | - | - | | | | - | - | | | | - | - |
| 624 | | | | | - | - | | | | - | - | | | | - | - |
| 605 | | | | | - | - | | | | - | - | | | | - | - |
| 625 | | | | | - | - | | | | - | - | | | | - | - |
| 606 | | | | | | | | | | | | | | | | |
| 626 | | | | | | | | | | | | | | | | |
| 678 | | | | | | | | | | | | | | | | |
| 698 | | | | | | | | | | | | | | | | |
| 608 | | | | | | | | | | | | | | | | |
| 628 | | | | | | | | | | | | | | | | |
| 6700 | | | | | | | | | | | | | | | | |
| 6800 | | | | | | | | | | | | | | | | |
| 6900 | | | | | | | | | | | | | | | | |
| 6000 | | | | | | | | | | | | | | | | |
| 6200 | | | | | | | | | | | | | | | | |
| 6701 | | | | | | | | | | | | | | | | |
| 6801 | | | | | | | | | | | | | | | | |
| 6901 | | | | | | | | | | | | | | | | |
| 6001 | | | | | | | | | | | | | | | | |
| 6201 | | | | | | | | | | | | | | | | |
| 6702 | | | | | | | | | | | | | | | | |
| 6802 | | | | | | | | | | | | | | | | |
| 6902 | | | | | | | | | | | | | | | | |
| 6002 | | | | | | | | | | | | | | | | |
| 6202 | | | | | | | | | | | | | | | | |
| 6803 | | | | | | | | | | | | | | | | |
| 6903 | | | | | | | | | | | | | | | | |
| 6003 | | | | | | | | | | | | | | | | |
| 6203 | | | | | | | | | | | | | | | | |
| 6704 | | | | | | | | | | | | | | | | |
| 6804 | | | | | | | | | | | | | | | | |
| 6904 | | | | | | | | | | | | | | | | |
| 6004 | | | | | | | | | | | | | | | | |
| 6204 | | | | | | | | | | | | | | | | |
| 6805 | | | | - | - | - | | | - | - | - | | | - | - | - |
| 6905 | | | | - | - | - | | | - | - | - | | | - | - | - |
| 6005 | | | | - | - | - | | | - | - | - | | | - | - | - |
| 6205 | | | | - | - | - | | | - | - | - | | | - | - | - |
| 6806 | | | | - | - | - | | | - | - | - | | | - | - | - |
| 6906 | | | | - | - | - | | | - | - | - | | | - | - | - |
| 6006 | | | | - | - | - | | | - | - | - | | | - | - | - |
| 6206 | | | | - | - | - | | | - | - | - | | | - | - | - |
| 6007 | | | | - | - | - | | | - | - | - | | | - | - | - |
| 6207 | | | | - | - | - | | | - | - | - | | | - | - | - |
| 6008 | | | | - | - | - | | | - | - | - | | | - | - | - |
| 6208 | | | | - | - | - | | | - | - | - | | | - | - | - |
| 6010 | | | | - | - | - | - | - | - | - | - | | | - | - | - |
| 6210 | | | | - | - | - | - | - | - | - | - | | | - | - | - |

The price of sealed VV and DD are the price shown in the table multiplied by 1.1.

Alterations

| Part Number | - | L | - | (NA) |
|---|---|---|---|---|
| BASY6000ZZ | - | 35 | - | NA |

| Alteration | Bearings Not Assembled |
|---|---|
| Code | NA |
| Spec. | Bearings are shipped unassembled to the housing. |