Note that, for some of the types shown here, order might be unable to be received by the MISUMI Indonesia offices.

Angle Plate Set for Fixtures

For Horizontal Rest / Vertical Rest

■**Features**: Machine the arm tip for product inspection and measurement. (See the app. example on the next page for details)

■Angle Plate Set for Fixtures - Horizontal Rest Position

For Left Facing

For Right Facing

■Angle Plate Set for Fixtures - Vertical Rest Position

For Left Facing

For Right Facing

RoHS10

Horizontal Rest Position
JIF (Set)
JINF (No Arm)

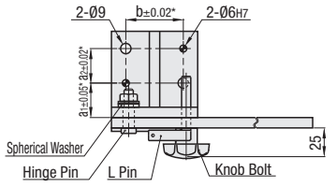

* Tolerance is applicable to the dowel hole only.

Vertical Rest Position
JIL (Set)
JINL (No Arm)

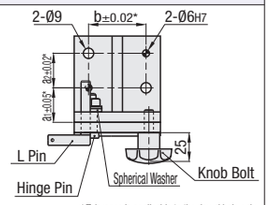

* Tolerance is applicable to the dowel hole only.

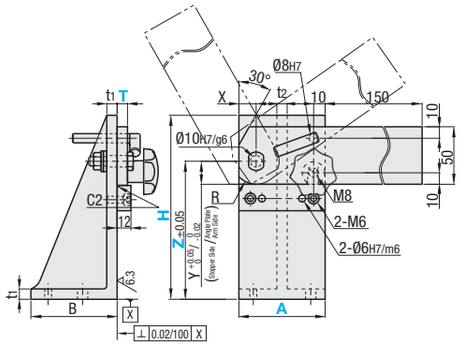

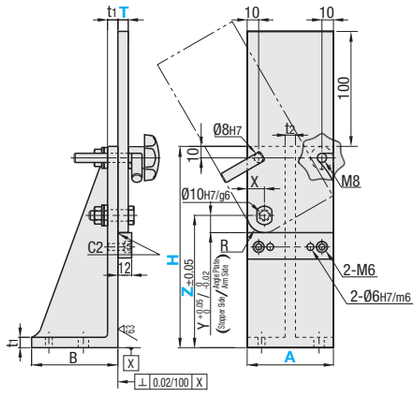

- The drawing is for a right-facing configuration. Mounting hole position on bottom is common to right and left facing types. Specify Alteration SYM to change to symmetrical mounting hole positions.
- Height of pivot hole (Z dimension) is selectable.
- Set products are pair engraved on the Angle Plates and Arms. Use match engraved pair.
- Stopper is assembled, but the arm is not assembled prior to shipping.
- For No Arm Type, L pin hole on angle plate is pilot hole (Ø7.8).

M Material
Angle Plate :FC250
Arm Stopper
:SS400

A Accessory

		(MISUMI P/N)
■ For Pivot Hole: Hinge Pins	(For H=~ 200)	CLBGNU10-24-FC21
	(For H=250)	CLBGNU10-27-FC21
Spherical Washer		No MISUMI P/N
■ For Arm Fixing	L Pin (Straight)	KJLSB8
	(Tapered)	KJLB8
	Knob Bolt	NKSM8
■ For Fixing Stoppers	Screws 2	CB6-20
	Dowel Pins 2	MSTM6-20

S45C/32-38HRC/ Black Oxide

Part Number Type	Direction	A	H Selection	T Selection	Z 5mm Increment Horizontal Rest	Z 5mm Increment Vertical Rest	L Pin	Pivot Position, Arm Dimension X	Y, R Horizontal Rest	Y, R Vertical Rest	Angle Plate Dimension B	t1	t2	Mounting Hole Position Dimension a1	a2	b
JIF JIL JINF JINL	(For Left Facing) L (For Right Facing) R	50	100	9 12	45~ 60	60	(Tapered) TP (Straight) ST	10	10	10	50	15	8	25	15	30
			150		65~110	60~110										
		75	150		55~120	60~ 90		15	20	15	75		14	30	30	50
			200		125~170	60~140										
		100	200		55~170	60~120					120	18	15	50	50	70
			250		175~220	60~170										

Ordering Example

Part Number	-	H	-	T	-	Z	-	L Pin
JIFL75	-	H150	-	T9	-	Z110	-	TP
JINFR50	-	H100			-	Z50	-	ST

Alterations

Part Number	-	H	-	T	-	Z	-	L Pin	-	(SYM, NNA)
JIFL75	-	H150	-	T9	-	Z110	-	TP	-	SYM

Alterations	Code	Spec.
Position of Bottom Face Mounting Hole 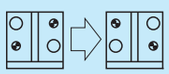	SYM	Positions the dowel hole and mounting hole symmetrically.
No Stopper Dowel Hole Ø7.8 (Both Angle Plate and Arm)	NNA	Eliminates dowel holes on stopper part (2-Ø6) and assembles L pin hole temporarily at Ø7.8. (Dowel Pin and L Pin are included) Adjust by spot fixing before use. (Adjustments required)

A	H	Unit Price JIF	JIL	JINF JINL
50	100			
	150			
75	150			
	200			
100	200			
	250			

Note that, for some of the types shown here, order might be unable to be received by the MISUMI Indonesia offices.

Angle Plates Support Stands / Angle Plates for Fixtures

■Angle Plate Support Stands

RoHS10

JIST
A=50, 75

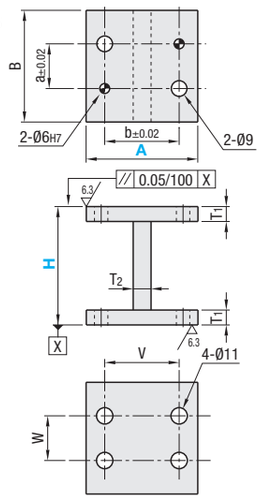

A=100

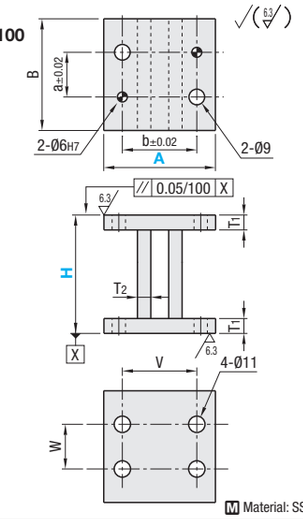

Material: SS400

Part Number Type	A	H Selection	B	a	b	T1	T2	V	W	Unit Price H100	H150,H200	H250
JIST	50	100	50	15	30	10	9	35	15			
	75	150 200	75	30	50		25	50	30			
	100	250	120	50	70		9	70	50			

Ordering Example

Part Number	-	H
JIST50	-	200

■Angle Plates for Fixtures

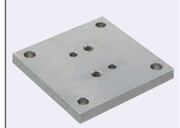

RoHS10

JIP

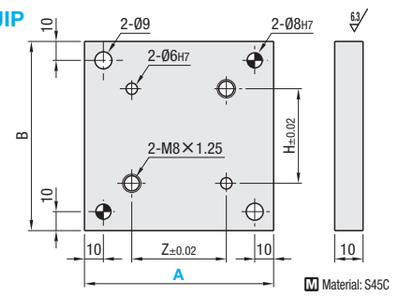

Material: S45C

Part Number Type	A	Applicable Angle Plate	B	Z	H	Unit Price
JIP	90	JI□□□50	90	15	30	
	115	JI□□□75	115	30	50	
	140	JI□□□100	160	50	70	

Ordering Example

Part Number
JIP90

Example

Height of pivot hole is adjustable.

(Positions of stopper and of L pins and knob bolts for horizontal position are adjusted at the same time.)

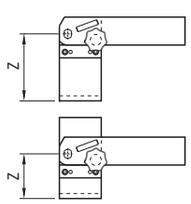

For Vertical Rest Position Type, connect attachments as required.

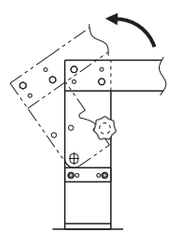

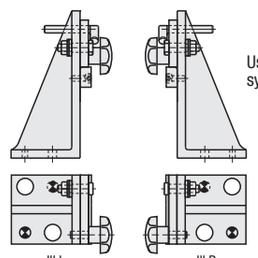

Usable for mounting angle plates symmetrically.

JILL (Alteration SYM)

JILR (Standard)