Conveyor Alternations ②

Brackets for Speed Controller Included / Post-Assembly Insertion Nuts Included / Switch Mode Power Supply Included / Motor Related / Self Kit Conveyor / Stands (Legs)

Dedicated web site http://fa.misumi.jp/cvs/
Conveyor selecting, component purchases, and easy search for maintenance parts are available.

Alterations	Code	Spec
Brackets for Speed Controller Included 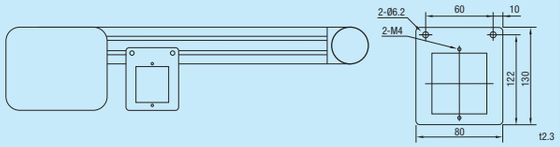	SCB	Mounting brackets for speed controller are included. Ordering Code SCB Applicable to the controllers for motors from Panasonic and Oriental, and for Taiwanese motors, regardless of the conveyor type. Two (2) mounting screws for brackets and two (2) mounting screws (M4x8) for controller are included. *Mounting may not be possible due to space limitations depending on the conveyor length. See the Application Chart for the applicable part numbers.
Post-Assembly Insertion Nuts Included 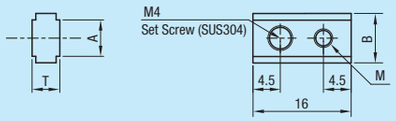	ANT□	Post-assembly insertion nuts for MISUMI conveyor frame slot are included. M Material: SUS316 Equivalent, Sintered Ordering Code ANT5-Q8-M4 For details of post-assembly insertion nuts, see **P.1307**.
Switch Mode Power Supply Included Switch mode power supply can be purchased as a separate item. For details, see Switch Mode Power Supply (With Case, 24VDC Output) on **P.1276**. ESP10-100-24	SWR	The switch mode power supply for AC power supply is included. Ordering Code SWR See the Application Chart for the applicable part numbers.
Motors with Electromagnetic Brake ■Connection Diagram 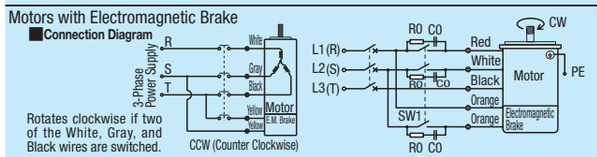 Rotates clockwise if two of the White, Gray, and Black wires are switched.	BR	Induction motor is changed to the motor with electromagnetic brake. Ordering Code BR Only 3-phase motors of Panasonic or Oriental specifications are selectable. For details of the motor, see **P.1272**. See the Application Chart for the applicable part numbers.
Motor with Terminal Box ■Oriental Specifications ■Panasonic Specifications 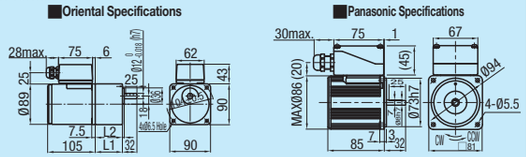	TBM	Induction motor is changed to the motor with terminal box. Ordering Code TBM Only motors for Panasonic or Oriental specifications are selectable. See the Application Chart for the applicable part numbers.
Orthogonal Shaft Gear Head 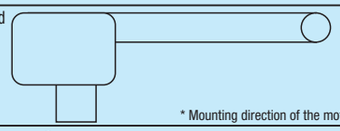 * Mounting direction of the motor is downward.	GHM	Gear head is changed to the orthogonal shaft type. Ordering Code GHM Only 25W and Oriental specification motor is selectable. For details of the motor, see **P.1267**. See the Application Chart for the applicable part numbers.
Self Kit Conveyor 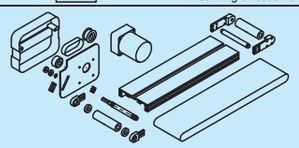	SELF	A set of parts for belt conveyor is delivered in the state of preassembly. Ordering Code SELF The customer is to assemble the unit according to the included assembly instructions. Tools for assembly need to be prepared by the customer. Please note that operations after assembly are not guaranteed. For details of the warranty, refer to the Instruction manual. To purchase a part as a separate item, visit Conveyor Selection Site. Note that SELF can only be combined with MK (Motor Position Reversed).

Part Number	B Selection	L Specify	Motor: Output (W)	Voltage (V)	Specification	Gearhead Reduction Ratio	Belt Specification	Motor Manufacturer Selection	Alterations
SVKA	50	500	25	T100	IM	5, 9, 12.5, 15 18, 25, 30, 36, 50 60, 75, 90, 120, 180	H	B (Oriental Motor)	SELF
	100	800							
	150	1000		NV (No Motor)	NM (No Motor)	NH (No Gearhead)		R (No Motor, Gearhead)	

EX.) SVKA - 100 - 800 - 25 - T100 - IM - 12.5 - H - B - SELF

■Conveyor Part Numbers - Alterations Application Chart

* Only applicable to SVKA

Alterations Code	SVKA SVKB	SVKN SVKR	CVGA, CVGB CVGC, CVGD	CVGN, CVGP CVGR, CVGW	CVSFA, CVSFB CVSFC, CVSFD	CVSE CVSF	CVSX CVSY	CVMA CVMB	CVLPA	CVSJA	CVSMA	CVSMB	CVDSA CVDSB	CVSTD	CVGTA CVGTB	CVGTN CVGTP	CVSTC	CVSTR	CVSPC	CVSPA	CVSSA
MK	●	-	●	-	●	●	-	●	-	-	-	-	●	-	●	-	●	-	●	●	●
MP	-	●	-	●	-	-	●	-	●	●	-	-	-	-	-	●	-	●	-	-	-
FYA, FYB	●	●	●	●	-	-	-	●	-	-	-	●	●	●	●	●	-	-	●	-	-
HR, MR, WR	-	●	-	●	-	-	-	-	-	-	-	-	-	-	-	-	-	-	-	-	-
CW	●	●	●	●	●	-	-	●	●	-	-	-	-	-	●	-	-	-	●	-	●
SCB	●	●	●	●	●	●	●	●	●	●	●	-	-	●	●	●	●	●	●	●	●
ANT5	●	●	-	-	-	●	●	-	●	-	-	-	-	-	-	-	-	-	-	-	-
ANT6	-	-	●	●	●	-	-	●	-	●	●	●	●	●	●	●	●	●	●	●	●
SWR	-	-	-	-	-	-	-	-	-	-	-	●	-	-	-	-	-	-	-	-	-
BR	-	●	-	●	-	-	●	-	-	-	-	-	●	-	-	●	-	●	-	-	-
TBM	●	-	●	-	●	●	-	●	-	-	-	-	●	-	●	●	●	●	●	●	●
GHM	-	-	-	-	-	-	-	-	-	-	-	-	-	-	-	-	-	-	●	-	-
SELF	*●	-	-	-	-	-	-	-	-	-	-	-	-	-	-	-	-	-	-	-	-
NA, WA	●	●	●	●	●	●	●	●	●	-	-	-	●	-	●	●	-	-	-	●	●
NK, WK	-	-	-	-	-	-	-	-	-	-	-	-	●	-	-	-	-	-	-	-	-

Alterations

Part Number	-	B	-	L	-	Motor: Output	-	Voltage	-	Specification	-	Gearhead Reduction Ratio	-	Belt Specification	-	F	-	Motor Manufacturer Selection	-	(NA□, WA□, NK□, WK□)
CVSFC	-	120	-	1350	-	25	-	T100	-	SCM	-	50	-	S	-	F600	-	B	-	NA2 - H500 - P500

Alterations

Belt Width ≤140mm

■Conveyor Stand I Type

NA□ (Leveling Bolt Type, Stand□Base + Reinforcements)

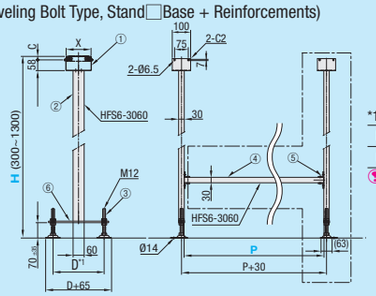

*1. D dimension chart

B	30~80	90~140
D	200	280

B refers to belt width.

■Conveyor Stand for Inclined Transfer I Type

NK□

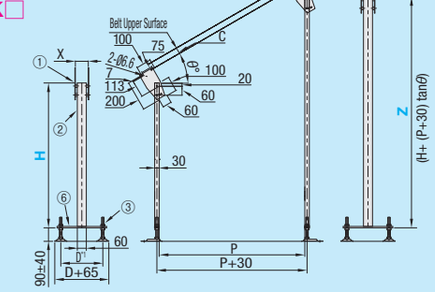

Belt Width ≥150mm

■Conveyor Stand H Type

WA□ (Leveling Bolt Type, Stand□Base + Reinforcements)

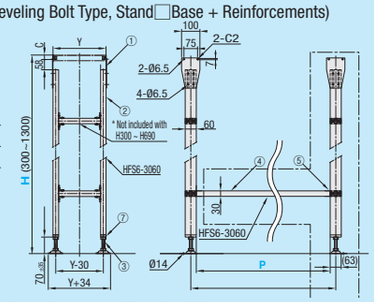

■Conveyor Stand for Inclined Transfer H Type

WK□

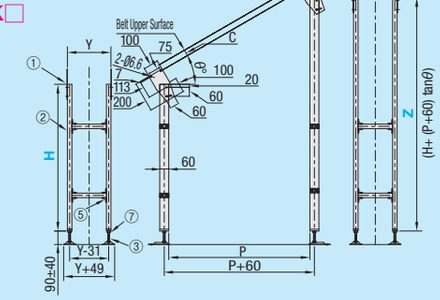

When the conveyor L dim. is 2005mm or more, use of 3 stands or more is recommended.
Reinforce stand for inclined transfer as necessary. Specify stand so as to avoid interference with other parts.

		①Bracket	②Aluminum Extrusion	③Level Adjusting Bolt	④Aluminum Extrusion	⑤Bracket	⑥Base Plate	⑦Foot Base
M Material	NA	SUS304	Aluminum	Steel	Aluminum	Aluminum	Steel	-
	WA, NK, WK	Steel						Steel
S Surface Treatment	NA	2B	Clear Anodize	Trivalent Chromate	Clear Anodize	Clear Anodize	Trivalent Chromate	-
	WA, NK, WK	Trivalent Chromate						Trivalent Chromate

Code

NA□, WA□, NK□, WK□

Spec.

Stand(s) will be added to the conveyor.

Ordering Code
NA1-H750-PN
WA3-H1200-P400
NK1-H550

(□-1) units of the diagram section [ ] are added to one conveyor stand unit.
Same as the standard delivery time.
When □=1, ④Aluminum Frame, ⑤Brackets are not included.
When □=1, the unit will not stand on its own.
When □≥2 where the ④Aluminum Frame is not needed, order CSTS, CSTW instead of specifying alterations.
P.1290
The stands are shipped unassembled. Assembly by customers required.

Code	Number of Stands	Height H	Pitch P
NA WA	1	300~1300	300~2000
	2		
	3		
	4		

H and P Dimensions configurable in 10mm increment.

Code	Number of Stands	Height H, Z
NK WK	1	400~1500
	2	

H and Z Dimensions configurable in 10mm increment.
Maximum adjustable angle $\theta = 30°$

■Mounting Dimension Table for NA□, WA□, NK□, WK□

Applicable Part Numbers	C	X, Y
SVKA, SVKB SVKN, SVKR CVGN, CVGP	21	B+41
CVGA, CVGB CVMA, CVMB CVSSA	21	B+37
CVGC, CVGD CVDSA, CVDSB	41	B+37
CVGR, CVGW	41	B+41
CVSE, CVSF CVSX, CVSY	35	B+51
CVSFA, CVSFC	21	B+6
CVSFB, CVSFD	41	B+6
CVGTA, CVGTN	21	B+21
CVGTB, CVGTP	41	B+31
CVSPA	48	B+31
CVLPA	7	B+41

* B stands for the belt width, and C for the dimension to the carrying surface.
Not applicable to CVSJA, CVSTC, CVSTR, CVSMA, CVSMB, CVSTD, CVSPC

Price Adder

Total price for stands will be (unit price + additional stand price x (□-1)).

EX.) NA1-H800-PN
EX.) NA3-H1000-P900
EX.) WK2-H600-Z800
EX.) NK1-H1000

Unit Price + Additional Stand Price = Total price for stands

Conveyor Stand I Type (NA□)

H	Unit Price	Additional Stand Price: PN	P300~590	P600~990	P1000~1590	P1600~2000
300~490						
500~690						
700~990						
1000~1300						

When □=1, specify PN.

Conveyor Stand H Type (WA□)

H	Unit Price	Additional Stand Price: PN	P300~590	P600~990	P1000~1590	P1600~2000
300~490						
500~690						
700~990						
1000~1300						

When □=1, specify PN.

Conveyor Stand for Inclined Transfer I Type (NK□)

H, Z	Unit Price
400~690	
700~990	
1000~1190	
1200~1500	

Conveyor Stand for Inclined Transfer H Type (WK□)

H, Z	Unit Price
400~690	
700~990	
1000~1190	
1200~1500	